Homework #1

(Due: Wednesday, 9/18/2019)

1. Determine if the structures below are stable or unstable. If stable, determine if the structure is determinate or indeterminate. Also find the degree of indeterminacy, if applicable.

(a)

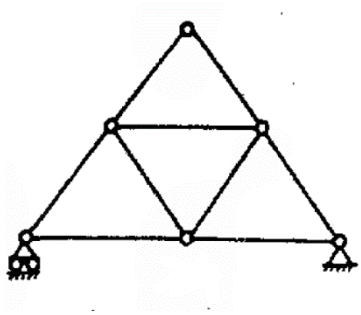

(b)

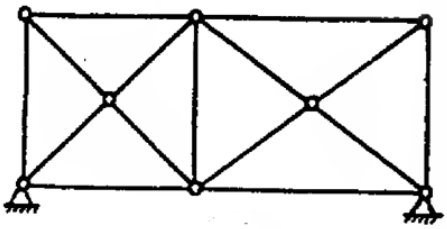

(c)

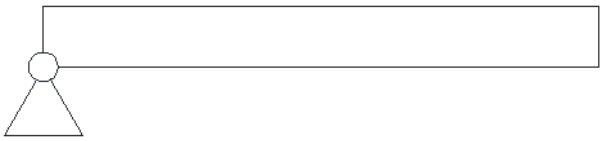

(d)

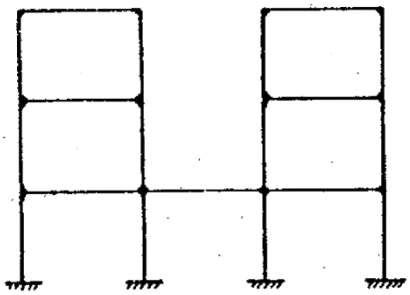

(rigid frame)

2. The beam supports the roof made from asphalt shingles and wood sheathing boards. If the boards have a thickness of 1.5 inches and a specific weight of 50 lb/ft^3, and the roof's angle of slope is 30°, determine the dead load of the roofing that is supported in the x and y directions by purlins. (Hint: Roof loads are area loads and hence the units are load per area).

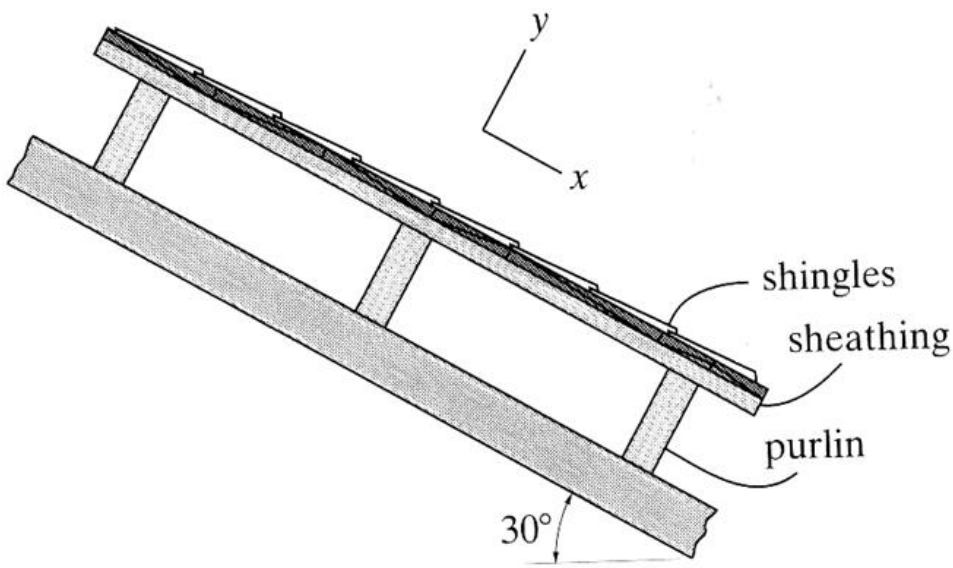

3. Determine the reactions for the following beams. Also, present moment diagram for the part (a):

   (a)

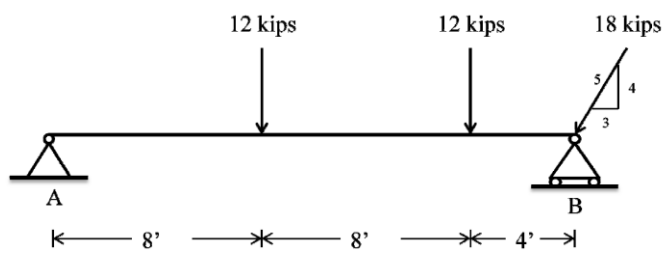

(b)