University of Maryland Fall 2015
ENCE353: Introduction to Structural Analysis

# In-Class Problem #6

Using the force method, determine the reactions at the supports. The moment of inertia for each segment is shown in the figure. Assume the support at B is a roller. Take E= 29(10$^3$) ksi.

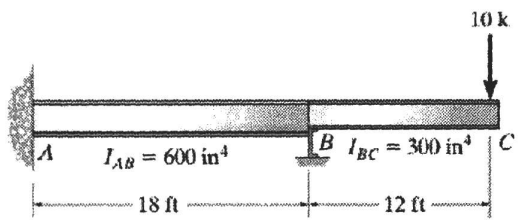


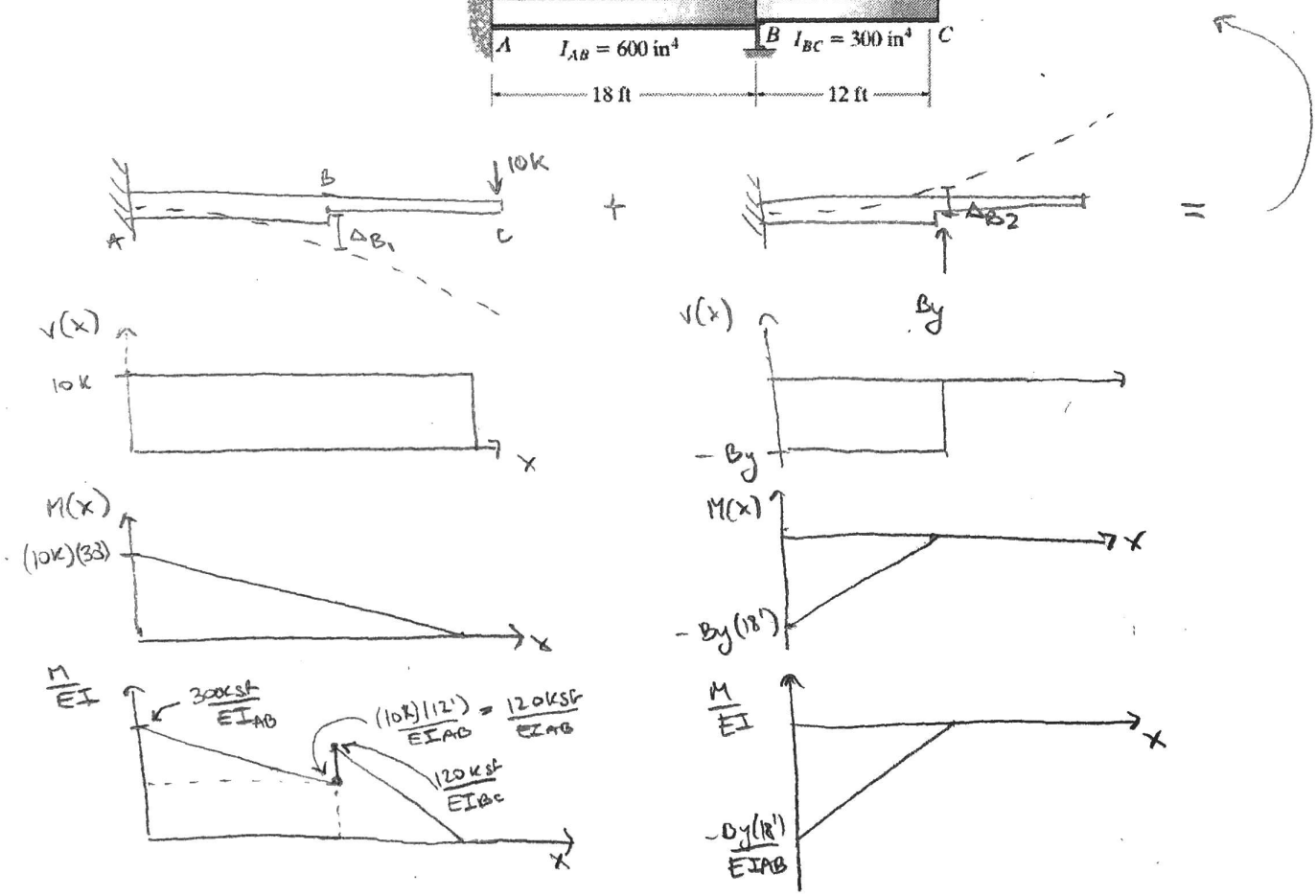


$$\Delta_{B_1} = t_{B/A} = (\text{dist. centroid to B}) \int \frac{M}{EI}$$

$$= \frac{120\text{ksf}}{EI_{AB}} \frac{(18')^2}{2} + \frac{1}{2} \frac{(300\text{ksf} - 120\text{ksf})}{EI_{AB}} (18')^2 \cdot \frac{2}{3}$$

$$\Delta_{B_1} = \frac{38880 \text{ k}\cdot\text{ft}^4}{EI_{AB}}$$

$$\Delta_{B2} = t_{B/A}$$

$$= -\frac{1}{2} \frac{(B_y)(18')^2}{EI_{AB}} \cdot \frac{2}{3}(18')$$

$$\Delta_{B2} = \frac{1944 \text{ k}\cdot\text{ft}^3}{EI_{AB}} B_y$$

$$\Delta_{B1} + \Delta_{B2} = 0$$

$$\frac{38880}{EI_{AB}} + \frac{1944}{EI_{AB}} B_y = 0$$

$$\boxed{B_y = 20K} \rightarrow \Sigma F_x, \Sigma F_y, \Sigma M_A \rightarrow \boxed{A_x = 0,\ A_y = 10K,\ M_A = 60K\cdot ft}$$